Kidde Fire Protection

Weight Indicator Mechanism (Part No. E8731-402)

USER'S MANUAL

December 2004 issue B

Manual No 59812-250

PROPRIETARY RIGHTS NOTICE

This document and the information that it contains are the property of Kidde Fire Protection. Rights to duplicate or otherwise copy this document and rights to disclose the document and the information that it contains to others and the right to use the information contained therein may be acquired only by written permission signed by a duly authorised officer of Kidde Fire Protection.

© Copyright Kidde Fire Protection Services Ltd

Amendment Incorporation Record

Amendment Number	Brief Description of Content	Name of person Incorporating Amendment
1		
2		
3		
4		
5		
6		
7		
8		
9		
10		

TABLE OF CONTENTS

Chapter **Page**

1. INTRODUCTION 1

1.1 GENERAL 1

1.2 OPERATION 1

2. SPECIFICATION 2

3. INSTALLATION 3

4.1 EVERY SIX MONTHS 10

4.2 EVERY TWELVE MONTHS 10

APPENDIX A TESTING 11

APPENDIX B ATEX COMPLIANCE 13

SPECIAL INSTRUCTIONS FOR COMPLIANCE WITH 94/9/EC 13

LIST OF ILLUSTRATIONS

Figure **Page**

Figure 1-1 Weight Indicator Mechanism 1
Figure 2-1 Dimensions 2
Figure 3-1 Flexible Conduit Installation 4
Figure 3-2 Electrical Installation - SERIES Two Wires 5
Figure 3-3 Electrical Installation - SERIES One Wire 5
Figure 3-4 Electrical Installation - PARALLEL 6
Figure 3-5 Mechanical Installation 8
Figure 3-6 Typical Support Frame 9
Figure A-1 Test Kit 12

1. INTRODUCTION

1.1 General

The Weight Indicator Mechanism (Part No. E8731-402) is a device used to automatically monitor the contents of a fixed fire CO_2 cylinder. When the contents of the cylinder fall by a pre-determined amount, typically 10%, the weight drops causing a microswitch to trip and send a signal to a signal panel.

The components of the weight indicator mechanism are shown in Figure 1-1. The device is supplied in a kit form, for assembly onto the mounting frame, and comprises: the body, two hanger rods, neck collar, weight, four off M10 nuts and washers, and one off M12 nut and washer.

The mounting frame will be supplied by others.

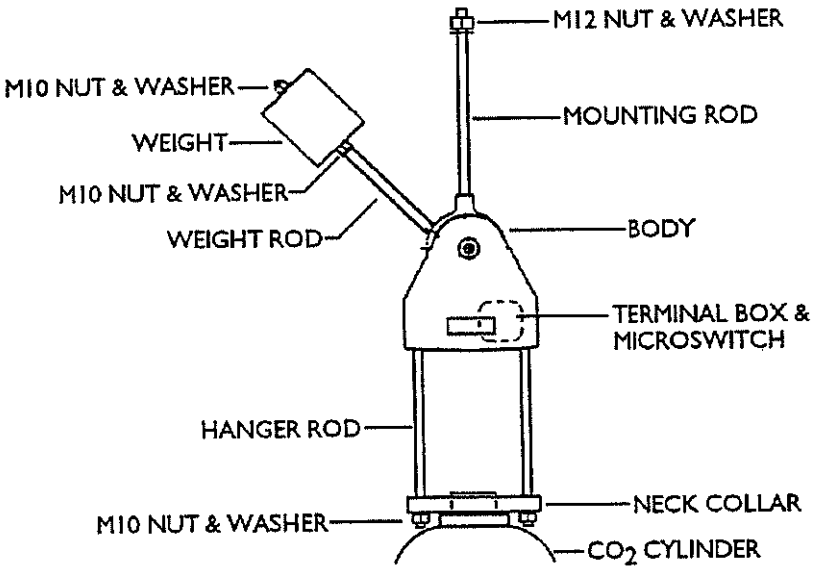

Figure 1-1 Weight Indicator Mechanism

1.2 Operation

When the weight indicator mechanism is set up, the downward force of the cylinder is greater than the leverage provided by the weight on the weight rod.

As the contents of the cylinder drops through a pre-determined amount, the downward force of the cylinder becomes less than the leverage of the weight, therefore the weight rod drops and trips the microswitch sending a signal to a control panel.

2. SPECIFICATION

Figure 2-1 shows the dimensions (in mm) of the weight indicator mechanism.

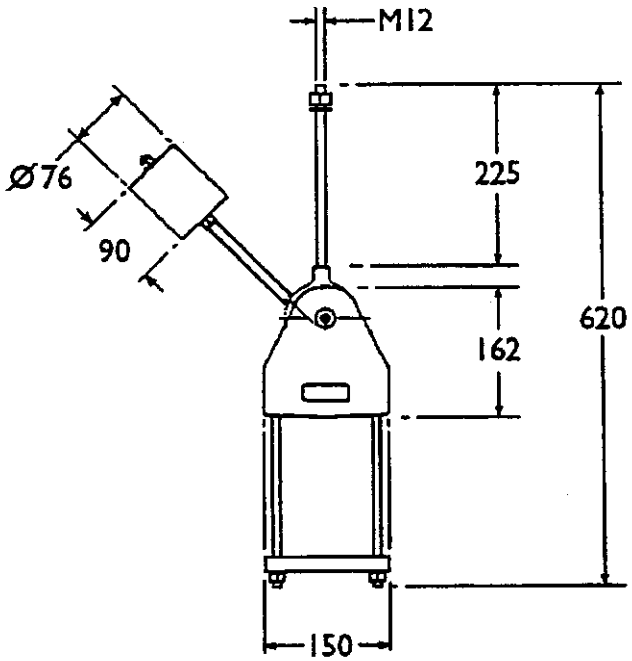

Figure 2-1 Dimensions

All screws and steel fittings are zinc plated.

Microswitch details:

Type:	Single-pole, volt-free, change-over.
Rating:	Maximum current 3 A at 125 or 250 V a.c.
Sealing:	Rated at IP 67 to BS5490.
Connections:	RED - common.
	BLUE - normally open (N/O).
	YELLOW - normally closed (N/C).

The customer is to provide protective flexible conduit (rated at IP 65 minimum), wire and insulated crimp pin or blade terminal connectors.

3. INSTALLATION

WARNING

THE CO_2 CYLINDER IS AT HIGH PRESSURE.

THE ANTI-RECOIL CAP MUST BE FITTED TO THE VALVE OUTLET AND THE PROTECTION CAP MUST BE FITTED BEFORE MOVING THE CO_2 CYLINDER.

NORMAL PRESSURE VESSEL HANDLING PRECAUTIONS MUST BE OBSERVED.

THE WEIGHT INDICATOR MECHANISM, FRAME AND CO_2 CYLINDER ARE HEAVY.

SAFETY CLOTHING (FOOTWEAR, GLASSES AND HARD HATS) MUST BE WORN WHEN CARRYING OUT INSTALLATION AND MAINTENANCE.

CAUTION
The frame must be fixed and all floors and walls must capable of supporting overall weight loadings.

The weight of the weight indicator mechanism is heavy and may operate at any time. It is therefore recommended that the weight indicator mechanisms and the CO_2 cylinders are installed in unoccupied areas.

To install the weight indicator mechanism carry out the following procedure and see Figures 3-1 through 3-6.

(a) Assemble the mounting frame, supplied by others, to comply with Figure 3-6.

(b) If the weight indicator mechanism is outside or in a damp environment, it is recommended that the threads are sprayed with oil to keep them free of rust.

(c) Using the mounting rod, fit the body to the mounting frame using the M12 nut and washer, see Figure 3-5.

(d) Remove the terminal box cover, by undoing the four M4x16 mm screws.

Connect the flexible conduit to each terminal box as shown in Figure 3-1.

Make sure that the flexible conduit, rated at IP 65 minimum, passes underneath the weight when it is in the down (operated) position and that it does obstruct the movement of the weight.

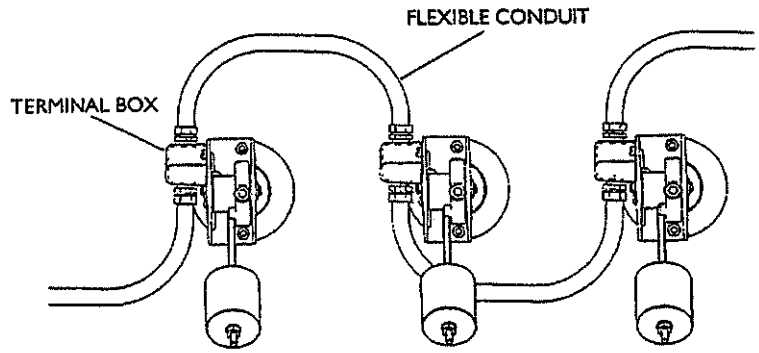

Figure 3-1 Flexible Conduit Installation

(e) It is recommended to connect the microswitch in SERIES, this enables the wires to monitored continuously.

CAUTION
Do not touch the microswitch.

If the microswitch contacts are to be wired in the NORMALLY CLOSED (N/C) position, i.e. in SERIES, carry out the procedure in steps (i) through (iv) and see Figure 3-2.

(i) Remove the BLUE wire from the terminal block, cut 10 mm from it and electrically insulate the end with an insulating cap or tape.

(ii) Thread the two core cable through the flexible conduit and connect to the terminal box as shown in Figure 3-2. Use an insulated crimp pin connector for each wire.

(iii) Replace the terminal box cover.

(iv) On the end/last terminal box, the spare exit hole from the terminal box must be sealed or blanked off to maintain IP 65.

NOTE A simpler SERIES installation using a single wire is shown in Figure 3-3. However, the wire will not be monitored continuously.

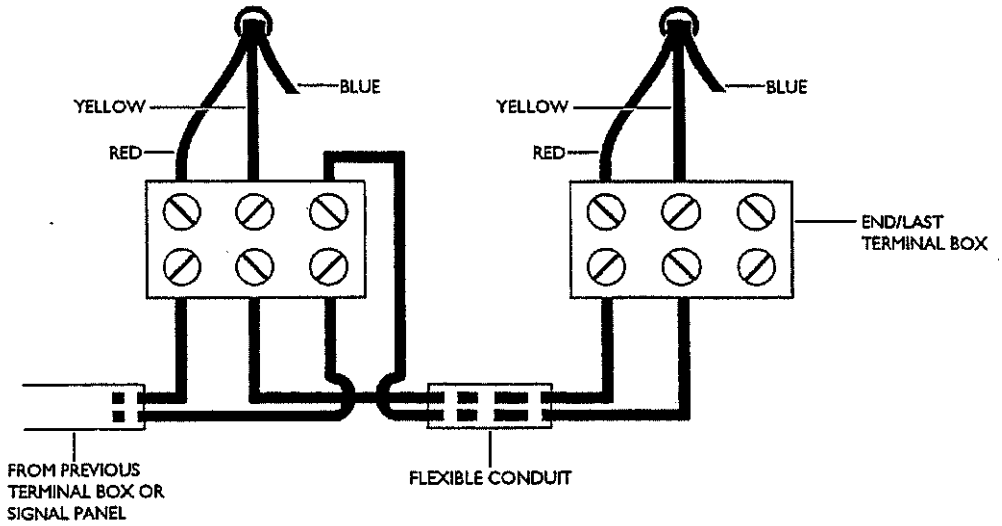

Figure 3-2 Electrical Installation - SERIES Two Wires

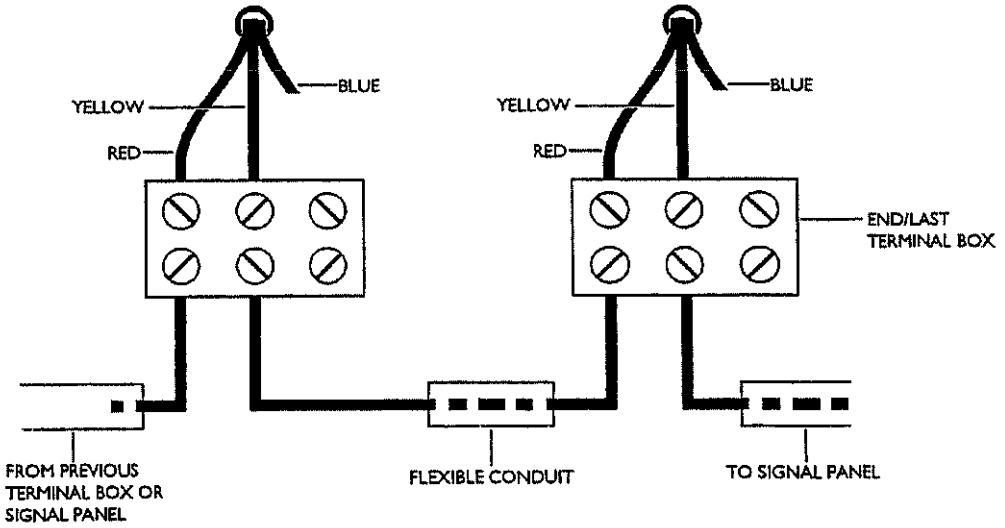

Figure 3-3 Electrical Installation - SERIES One Wire

If the microswitch contacts are to be wired in the NORMALLY OPEN (N/O) position, i.e. in PARALLEL, carry out the procedure in steps (v) through (viii) and see Figure 3-4.

(v) Remove the YELLOW wire from the terminal block, cut 10 mm from it and electrically insulate the end with an insulating cap or tape.

(vi) Thread the two core cable through the flexible conduit and connect to the terminal box as shown in Figure 3-4. Where two wires are to be connected into same terminal outlet, use an insulated blade terminal connector.

(vii) Replace the terminal box cover.

(viii) On the end/last terminal box, the spare exit hole from the terminal box must be sealed or blanked off to maintain IP 65.

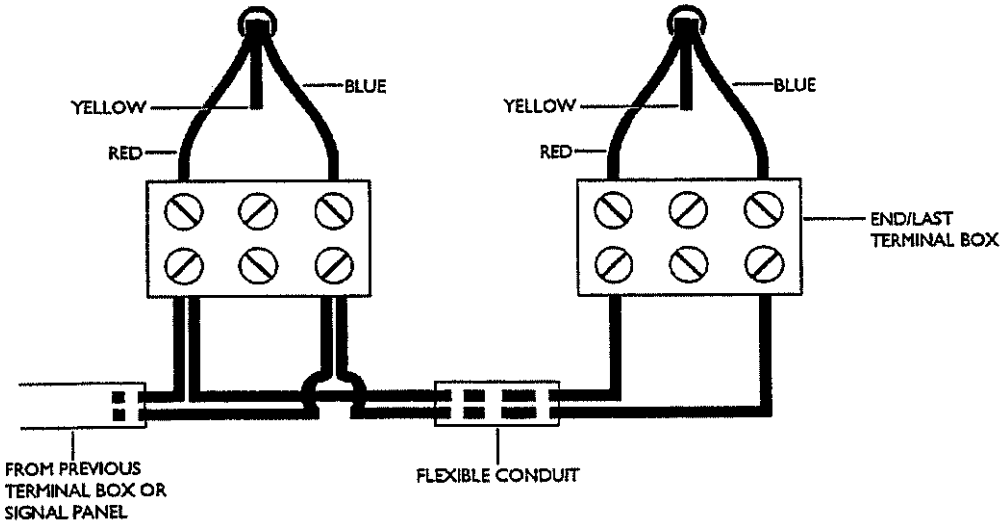

Figure 3-4 Electrical Installation - PARALLEL

(f) Make sure that the protection cap is fitted and inspect the cylinder for external damage.

(g) Weigh the cylinder for correct contents using a scale weighing device and record the weight.

WARNING
IF CYLINDERS ARE TO BE MOVED IN A SKID ASSEMBLY, THEY MUST BE SECURELY WEDGED IN POSITION TO PREVENT MOVEMENT.

(h) Transport the cylinder to its position at the mounting frame using a suitable trolley. Remove the securing wedge from the cylinder.

(i) Remove the protection cap from the cylinder and store in a safe place.

(j) Screw the neck collar fully onto the cylinder ensuring that all threads are engaged. Make sure that the cylinder valve outlet is in the correct position.

(k) Connect the flexible discharge hose to the manifold and torque to between 30 and 40 Nm.

(l) Remove the anti-recoil cap from discharge outlet of the cylinder valve and store in a safe place.

Connect the other end of the flexible discharge hose to the discharge outlet of the cylinder valve and torque to between 30 and 40 Nm.

(m) Fit the two hanger rods through the holes in the body and the neck collar. Secure with an M10 nut and washer on each hanger rod, see Figure 3-5.

Make sure that the M10 nuts are screwed evenly onto the hanger rods by the same amount.

(n) Tighten the M12 nut, on the mounting rod, until the cylinder is 20 mm from the floor or mounting frame base.

NOTE Make sure that the cylinder is hanging vertically. If not, carefully adjust the nuts on the hanger rods until the cylinder is hanging vertically

(o) Fit an M10 nut to the weight rod and wind halfway down the rod. Fit an M10 washer to the weight rod, followed by the weight, another M10 washer and finally an M10 nut. DO NOT TIGHTEN.

(p) With the weight rod in the “full” (uppermost) position, slowly wind the nuts and weight up the rod away from the body, until a position is reached where the weight rod will just begin to drop from its stop.

(q) From this set point, wind the inner nut towards the body by five turns. Hold this position and lock the other nut against the weight. With the weight in the “full” position, the indicator is now set.

(r) If required, carry out the testing procedure, refer to Appendix A.

(s) Repeat steps (a) through (r) for each weight indicator mechanism and cylinder.

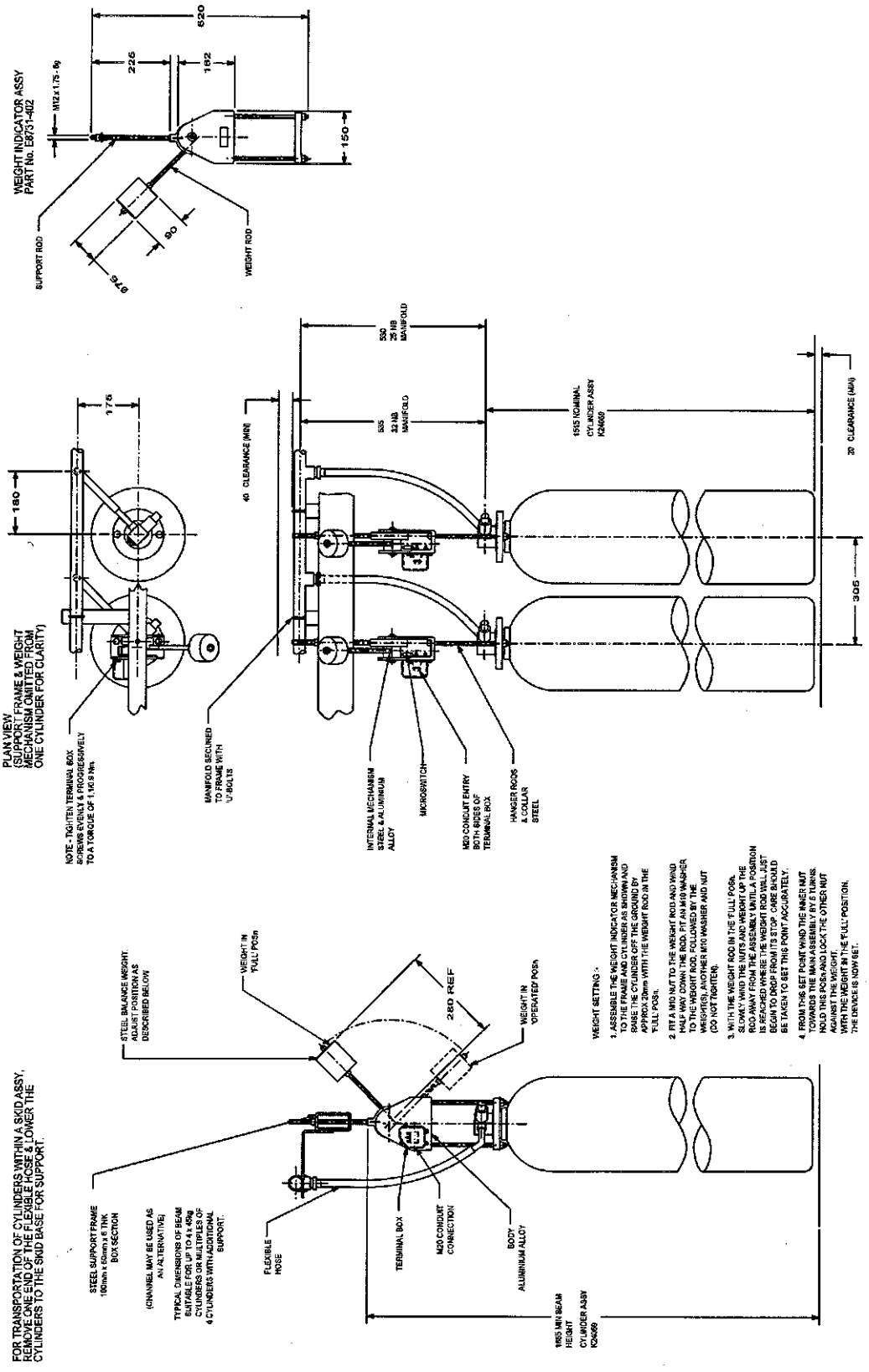

Figure 3-5 Mechanical Installation

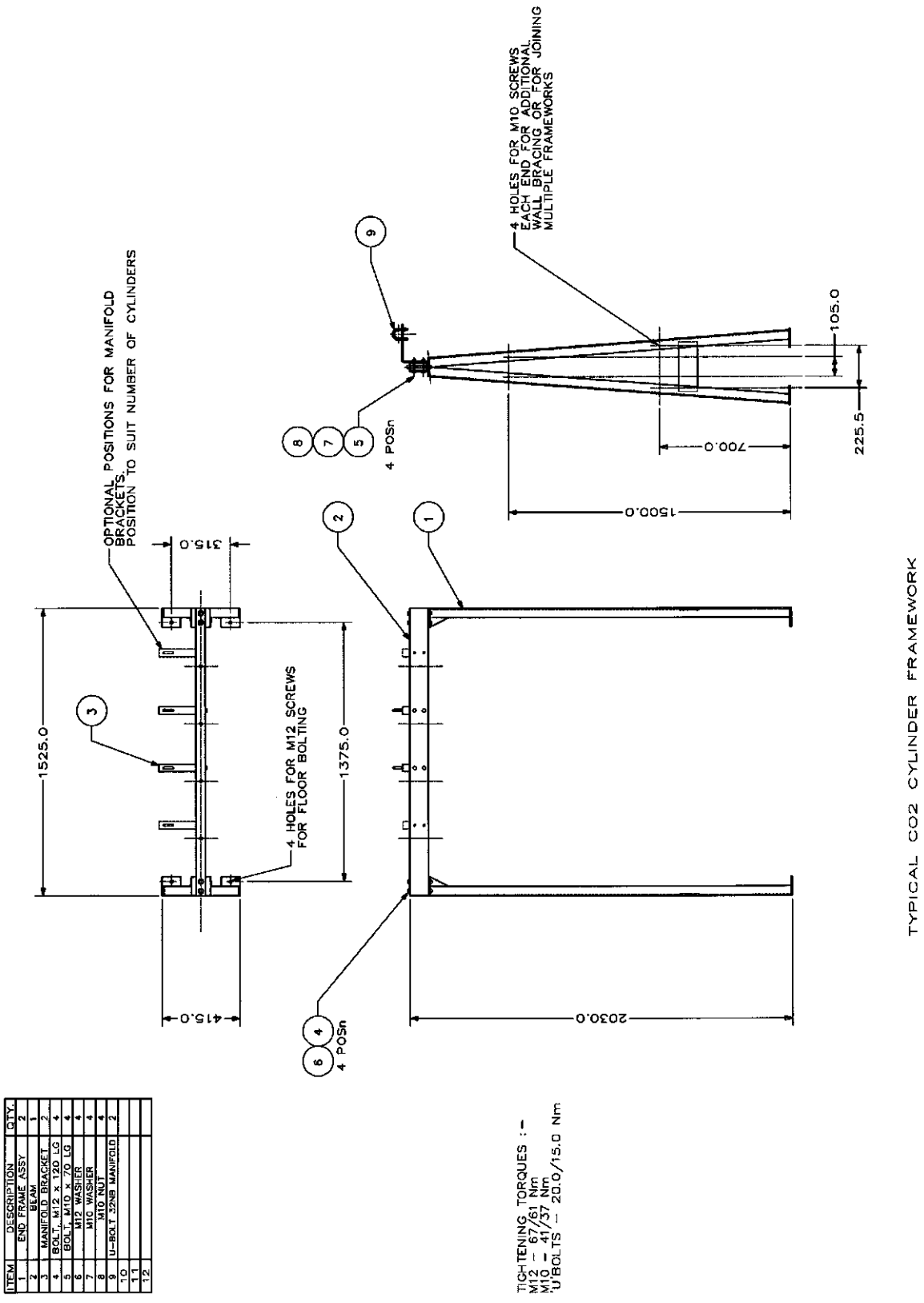

ITEM	DESCRIPTION	QTY.
1	END FRAME ASSY	2
2	BEAM ASSY	2
3	MANIFOLD BRACKET	2
4	BOLT, M12 x 120 LG	4
5	BOLT, M10 x 70 LG	4
6	M12 WASHER	4
7	M10 WASHER	4
8	M10 NUT	4
9	U-BOLT 32NB MANIFOLD	2
10		
11		
12		

Figure 3-6 Typical Support Frame

4. MAINTENANCE

WARNING

THE CO_2 CYLINDER IS AT HIGH PRESSURE.

THE ANTI-RECOIL CAP MUST BE FITTED TO THE VALVE OUTLET AND THE PROTECTION CAP MUST BE FITTED BEFORE MOVING THE CO_2 CYLINDER.

NORMAL PRESSURE VESSEL HANDLING PRECAUTIONS MUST BE OBSERVED.

THE WEIGHT INDICATOR MECHANISM, FRAME AND CO_2 CYLINDER ARE HEAVY.

SAFETY CLOTHING (FOOTWEAR, GLASSES AND HARD HATS) MUST BE WORN WHEN CARRYING OUT INSTALLATION AND MAINTENANCE.

IT IS RECOMMENDED TO MOVE THE WEIGHT ROD TO THE OPERATED (LOWER) POSITION BEFORE ANY WORK IS CARRIED OUT ON THE CYLINDER AND/OR VALVE.

4.1 Every Six Months

(a) Check tightness of nuts and bolts.

(b) If required, carry out the testing procedure, refer to Appendix A.

4.2 Every Twelve Months

(a) Check the threads for rust, clean and apply an oil spray if necessary

(b) Carry out the six monthly check.

APPENDIX A TESTING

WARNING

THE CO_2 CYLINDER IS AT HIGH PRESSURE.

THE ANTI-RECOIL CAP MUST BE FITTED TO THE VALVE OUTLET AND THE PROTECTION CAP MUST BE FITTED BEFORE MOVING THE CO_2 CYLINDER.

NORMAL PRESSURE VESSEL HANDLING PRECAUTIONS MUST BE OBSERVED.

THE WEIGHT INDICATOR MECHANISM, FRAME AND CO_2 CYLINDER ARE HEAVY.

SAFETY CLOTHING (FOOTWEAR, GLASSES AND HARD HATS) MUST BE WORN WHEN CARRYING OUT INSTALLATION AND MAINTENANCE.

If the user wishes to confirm that the weight indicator mechanism is functioning correctly, a test kit can be built, see Figure A-1.

The procedure for testing is given below.

(a) Assemble the test kit as shown in Figure A-1.

(b) With the weight rod in the “FULL” position, carefully lower the test weight, between 3.2 and 4.5 kg, onto the test kit.

NOTE The test weight, between 3.2 and 4.5 kg, represents a weight loss of CO_2 corresponding to between 7 and 10%.

(c) When the weight indicator mechanism is set correctly, the mechanism will trip.

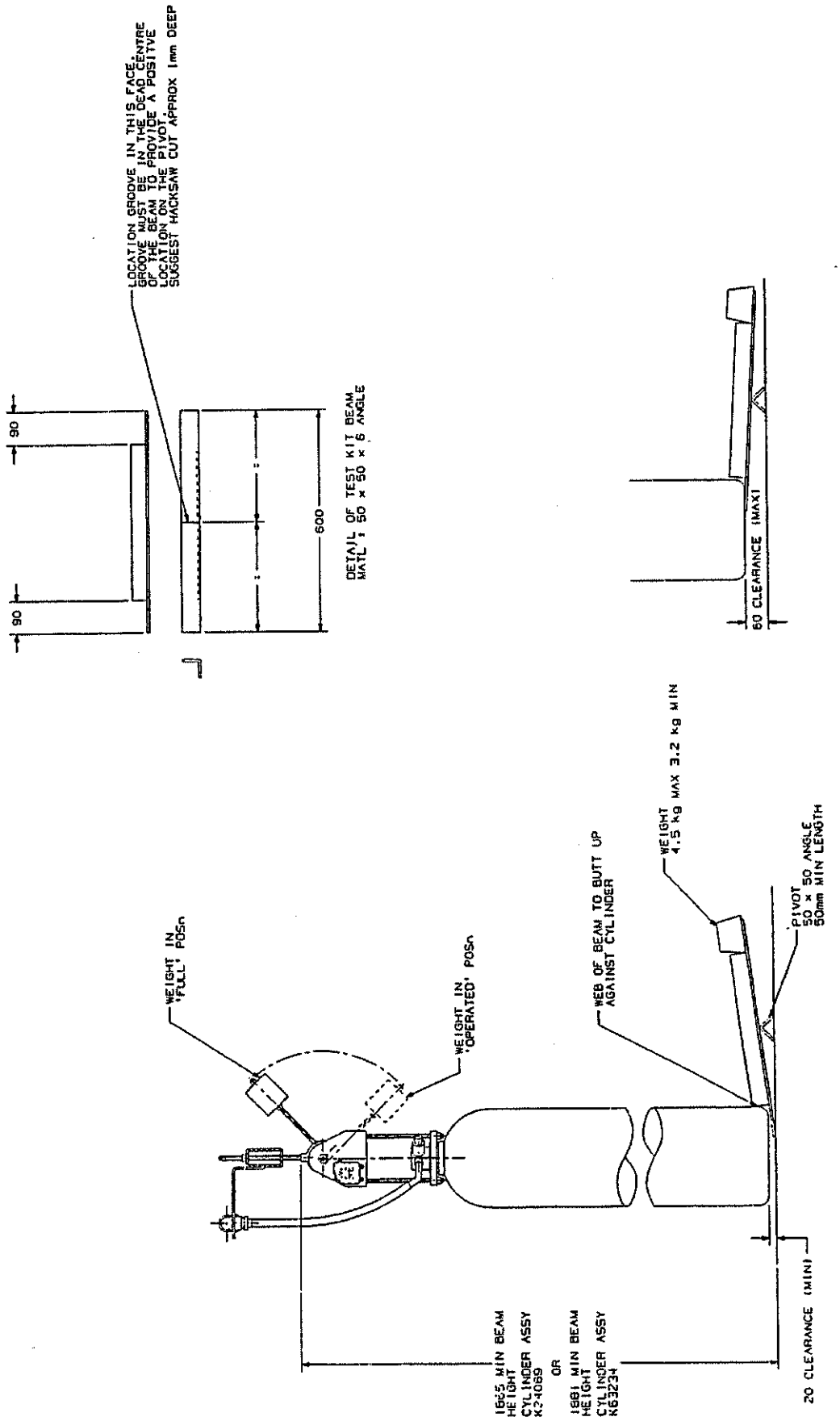

Figure A-1 Test Kit

APPENDIX B ATEX COMPLIANCE

SPECIAL INSTRUCTIONS FOR COMPLIANCE WITH 94/9/EC

1. Area classification

Weight Indicator Mechanism and Weight Indicator Mechanism Unswitched part numbers, E8731-402 and E8731-403 respectively.

Weight Indicator Mechanisms are used to monitor the contents of CO2 45kg extinguisher assemblies. Weight Indicator Mechanisms have been designed and certified as a non-electric equipment for compliance to the following hazardous area classification:

Group II category 3 GD c T6 X

The user of this equipment should make themselves aware of the following information;

2. Placing the device into service

These Weight Indicator Mechanisms may be installed in an area classified as Zone 2 or Zone 22 or unclassified.

3. Safe use of Weight Indicator Mechanisms

Weight Indicator Mechanisms are for use only as a contents indicator system for CO2 45 kg extinguishers.

The switched version is to be used with an intrinsically safe supply suitable for the hazard area.

4. Assembling and dismantling

Weight Indicator Mechanisms are supplied complete and ready to install in accordance with KFP Weight Indicator Mechanism Users Manual 59812-250.

5. Installation

Weight Indicator Mechanism installation shall be in accordance with KFP Weight Indicator Mechanism Users Manual 59812-250, except that where fitted the switch circuit shall be intrinsically safe and appropriate to the hazard.

6. Maintenance (service and emergency repair)

For maintenance of Weight Indicator Mechanisms refer to manual 59812-250.

7. Adjustment

After Installation adjustment of the Weight Indicator Mechanism is not required. For initial set up follow instructions provided in KFP Weight Indicator Mechanism Users Manual 59812-250

8. Training

Consult KFP Weight Indicator Mechanism Users Manual 59812-250 before use.

9. Limitations of use

Weight Indicator Mechanisms must only be used within areas specified by the hazardous area certification as indicated on the equipment label

10. Special Parameters

The ambient temperature for this equipment is –18°C to 55°C.

sales@norrscope.com